AMP: AIR MANAGEMENT BY PACBRAKE

HP325 12 VOLT AIR COMPRESSORS

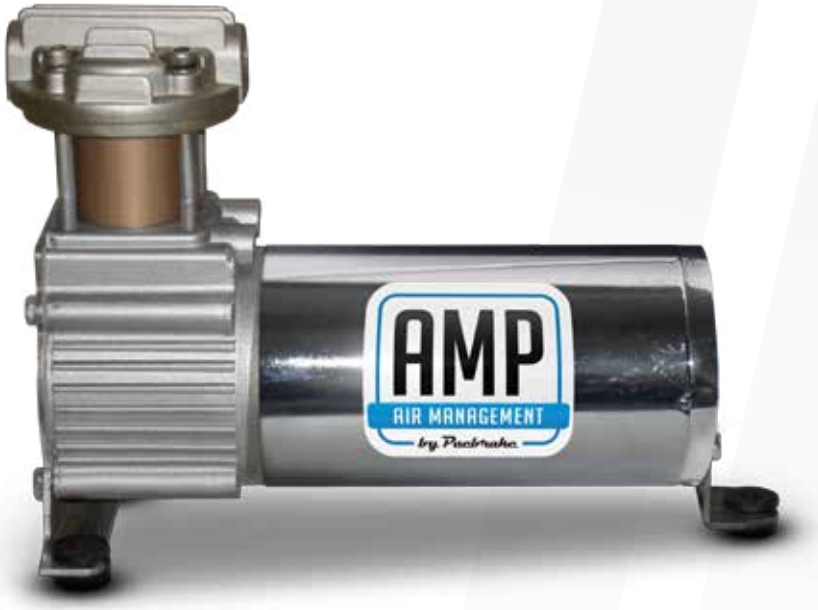

PRODUCT FEATURES

- Sealed bearings
- Cast steel cylinder head
- Hard anodized aluminum cylinder
- PTFE piston ring
- Mountable in any orientation

GENERAL DATA	
Model	HP10143
Weight	5.5 lbs
Ambient Temperature Range	-40 to 70°C
Max Duty Cycle	100% (1 hour @ 100 PSI)
Max Continuous Run Time	1 hr
Operating Life	300 hrs*
Ingress Protection	IP52 (IP55 w/remote intake)

PNEUMATIC DATA	
Rated Flow	1.1 SCFM
Max Working Pressure	150 PSI
Max Restart Pressure	135 PSI

ELECTRICAL/MOTOR DATA	
Motor Type	Permanent Magnet DC
Operating Voltage	12 V ± 15%
Maximum Current Draw	17 A
Nominal Power	¼ HP
Nominal Speed	3000 RPM

**Operating life may be dependent on application*

AMP: AIR MANAGEMENT BY PACBRAKE

HP325 12 VOLT AIR COMPRESSORS

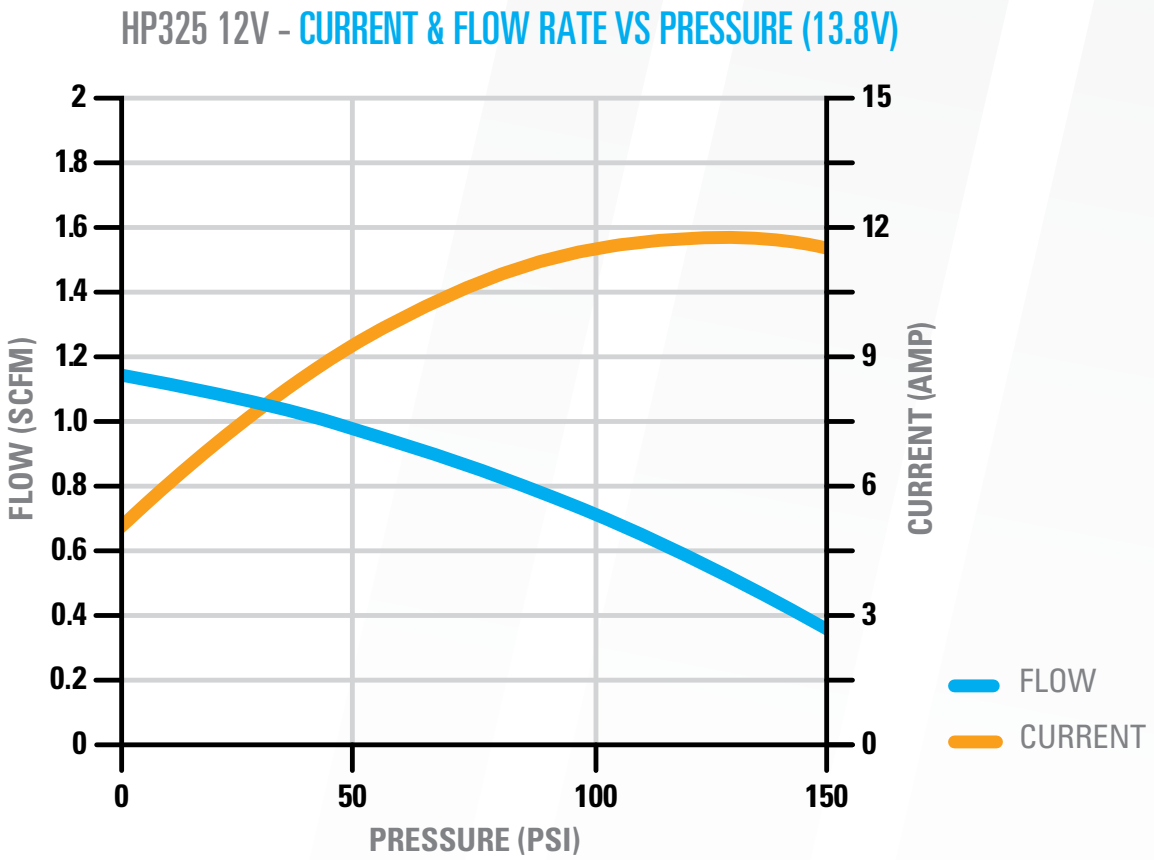

TANK FILL TIME HP325 12V

TANK SIZE	TANK PART NUMBER	0 to 100 PSI	100 to 150 PSI
½ Gallon	HP10053	23 seconds	23 seconds
2½ Gallon	HP10050	157 seconds	130 seconds

AMP: AIR MANAGEMENT BY PACBRAKE

HP325 12 VOLT AIR COMPRESSORS
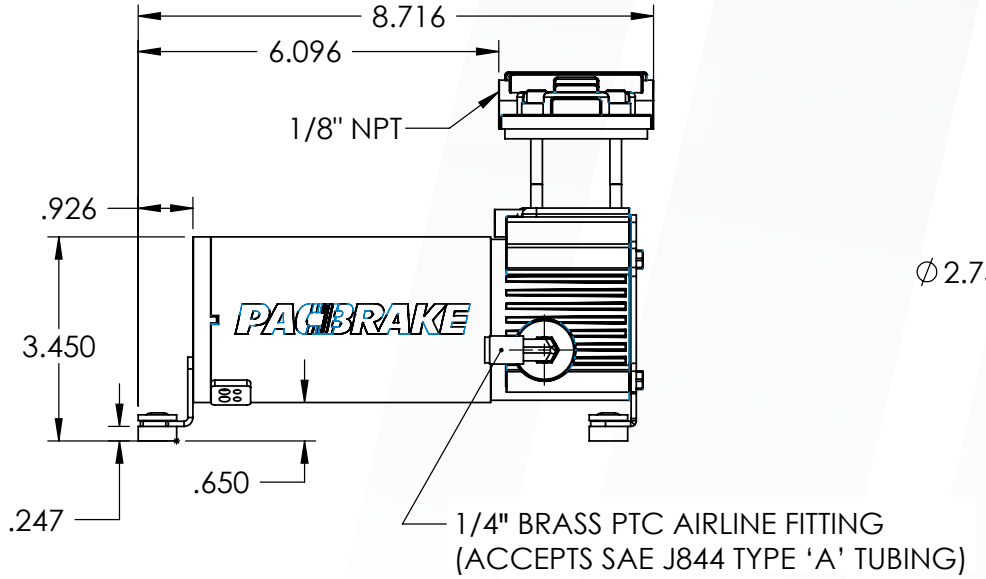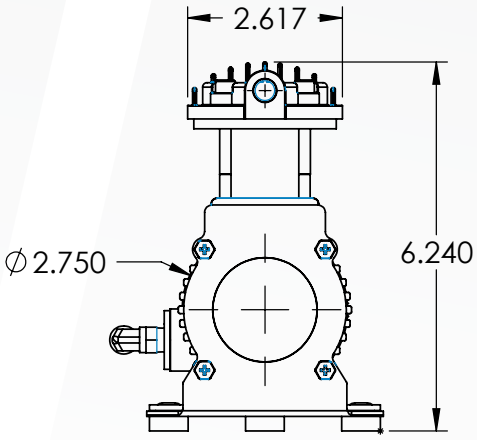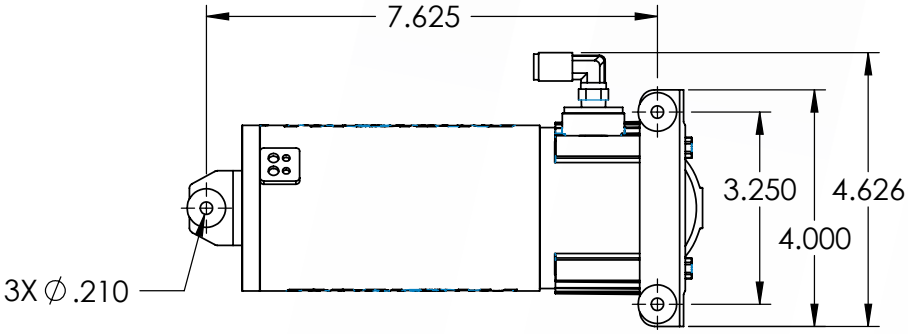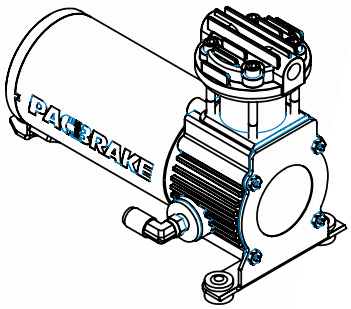
HP325 12V AIR COMPRESSOR DIMENSIONS (IN INCHES)